Ice Machine ZBE 550 R454C

Specification





High-quality components in a robust stainless steel housing

Key features

- Capacity: 550 kg/24 h crushed ice at 20 °C air temperature and 15 °C water temperature
- Capacity: 550 kg/24 h crushed ice at 35 °C air temperature and 25 °C water temperature
- Ideal ice temperature of -0.5 °C
  MacroIce, StandardIce or MicroIce
- Designed for continuous operation: 24 hours a day, 7 days a week
- Hygienic design:
  Closed water system – protection against contamination from external influences
- Environmentally friendly technology:
  No rotating parts in the evaporator's refrigeration circuit – no refrigerant leaks


MacroIce (MA)

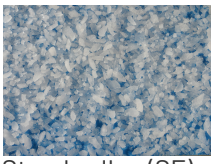
StandardIce (SE)

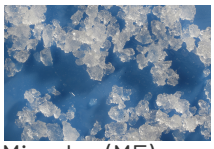
MicroIce (ME)

Dimensions and connections

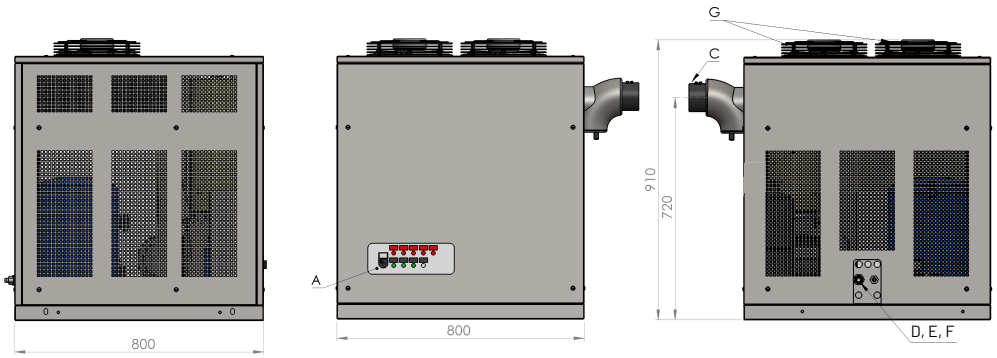

A Operating switch
C Ice discharge
D Electrical connection
E Water inlet
F Water outlet
G Condenser fan

To be provided by customer:
Water filter
Shut-off valve
Electrical fuse
Wastewater connection (contactless)

Technical specifications

General

	ZBE 550 (R454C at 20 °C)	ZBE 550 (R454C 35 °C)
Nominal capacity [kg/24h]	550	550
Dimensions (L x W x H) [cm]	80 x 80 x 85	80 x 80 x 85
Weight [kg]	approx. 190	200
Housing	Stainless steel 1.4301/1.4307	Stainless steel 1.4301/1.4307
Ambient temperature [°C]	5 - 42	5 - 45
Minimum room volume [m^3]	39.2	39.2

Made in Germany

www.ziegra.com ❄ ice@ziegra.com ❄ Tel: +49 (0)511 90 244 0

Specification

Refrigerants

	ZBE 550 (R454C at 20 °C)	ZBE 550 (R454C 35 °C)
Refrigerant	R454C	R454C
Refrigerant quantity [kg]	2.3	2.3

Electrical data

	ZBE 550 (R454C at 20 °C)	ZBE 550 (R454C 35 °C)
Supply voltage	3/N/PE ~ 400V 50 Hz	3/N/PE ~ 400V 50 Hz
Power consumption [kW]	2.0	2.1
Current consumption [A]	4.7	5.0
Fuse, slow-blow	20	25
Cable cross-section [mm^2], Cu	4	4

Water connection data

	ZBE 550 (R454C at 20 °C)	ZBE 550 (R454C 35 °C)
Water temperature [°C]	5 - 25	10 - 35
Water pressure [bar]	1 - 5	1 - 5
Quality	Drinking water	Drinking water
pH value	7.2 - 9.5	7.2 - 9.5
Hardness	6 - 14 °dH | 100 - 250 mg $CaCO_3$/l	6 - 14 °dH | 100 - 250 mg $CaCO_3$/l
Water supply	3/4" external thread	3/4" external thread
Water drain	14 mm hose nozzle	14 mm hose nozzle

Condenser

	ZBE 550 (R454C at 20 °C)	ZBE 550 (R454C 35 °C)
Condenser	Air-cooled	Air-cooled
Heat carrier flowrate [m^3/h]	2500	2500
Heat emission [kW]	4.5	5.4

Compressor

	ZBE 550 (R454C at 20 °C)	ZBE 550 (R454C 35 °C)
Compressor	Fully hermetic	Fully hermetic
Cooling capacity [kW]	2.8	3.1
Evaporation temperature [°C]	-20	-21
Condensation temperature [°C]	33	45

Noise emissions

	ZBE 550 (R454C at 20 °C)	ZBE 550 (R454C 35 °C)
Sound power level [dBA]	77.5	79.5
Sound pressure level 3 m [dBA]	60	62

Subject to technical changes. Please consult us in the event of any discrepancies.

Contents of the package

The ZIEGRA ice machine is supplied CE-compliant and ready for use, requiring only connection to water and electricity.

Made In Germany

Ice Machine ZBE 550 R454C

ZIEGRA Quality and Safety

- Condensation control for consistent ice quality
- Phase sequence relay
- High/low pressure switch
- Overvoltage/undervoltage monitoring for 3-phase machines
- Overcurrent trip device / thermal protection for all motors and compressors
- Water level monitoring

Accessories included

- Ice discharge hose or ice discharge chute as required
- Shutdown via reflective light sensor when the trolley or tank is full
- Connection cable with plug
- Water inlet and outlet hoses
- PE ice scoop
- A wide range of accessories available on request

Specification

Made In Germany

www.ziegra.com ❄ ice@ziegra.com ❄ Tel: +49 (0)511 90 244 0