# Ice Machine ZBE 1.200 R454C

Specification






High-quality components in a robust stainless steel housing

## Key features

- Capacity: 1200 kg/24 h crushed ice at 20 °C air temperature and 15 °C water temperature
- Capacity: 1200 kg/24 h crushed ice at 35 °C air temperature and 25 °C water temperature
- Designed for continuous operation: 24 hours a day, 7 days a week
- Hygienic design:
  Closed water system – protection against contamination from external influences
- Environmentally friendly technology:
  No rotating parts in the evaporator's refrigeration circuit – no refrigerant leaks


MacroIce (MA)

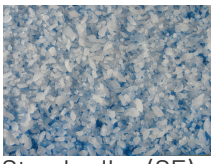
StandardIce (SE)

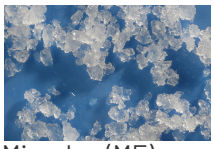
MicroIce (ME)

## Dimensions and connections

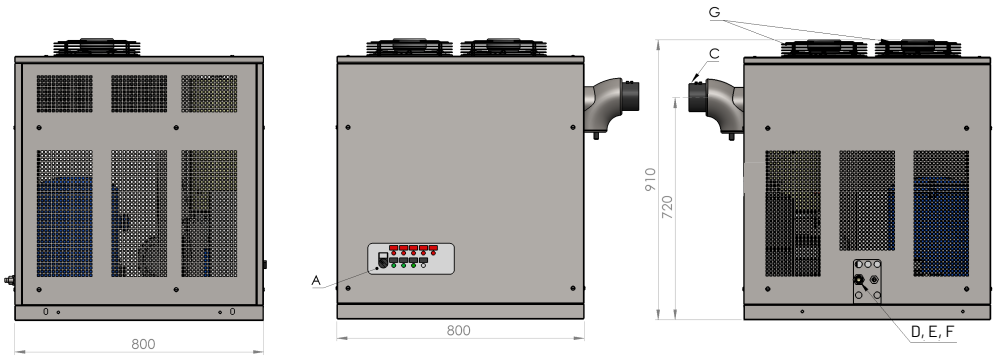


**A Operating switch**
**C Ice discharge**
**D Electrical connection**
**E Water inlet**
**F Water outlet**
**G Condenser fan**

To be provided by customer:
Water filter
Shut-off valve
Electrical fuse
Wastewater connection (contactless)

## Technical specifications

### General

| | ZBE 1.200 (R454C 20 °C) 400V | ZBE 1.200 (R454C 35 °C) 400V |
|---|---|---|
| Nominal capacity [kg/24h] | 1200 | 1200 |
| Dimensions (L x W x H) [cm] | 80 x 80 x 85 | 80 x 80 x 85 |
| Weight [kg] | 210 | 220 |
| Housing | Stainless steel | Stainless steel |
| Ambient temperature [°C] | 5 - 42 | 5 - 45 |
| Minimum room volume [$m^3$] | 52.9 | 59.7 |

Made in Germany


www.ziegra.com ❄ ice@ziegra.com ❄ Tel: +49 (0)511 90 244 0

Specification

### Refrigerants

| | ZBE 1.200 (R454C 20 °C) 400V | ZBE 1.200 (R454C 35 °C) 400V |
|---|---|---|
| Refrigerant | R454C | R454C |
| Refrigerant quantity [kg] | 3.1 | 3.5 |

### Electrical data

| | ZBE 1.200 (R454C 20 °C) 400V | ZBE 1.200 (R454C 35 °C) 400V |
|---|---|---|
| Supply voltage | 3/N/PE ~ 400V 50 Hz | 3/N/PE ~ 400V 50 Hz |
| Full load current [A] | 9.5 | 10.5 |
| Power consumption [kW] | 3 | 4.3 |
| Fuse, slow-blow | 32 A | 32 A |
| IP protection class | IP 54 | IP 54 |
| Cable cross-section [$mm^2$], Cu | 4 | 4 |

### Water connection data

| | ZBE 1.200 (R454C 20 °C) 400V | ZBE 1.200 (R454C 35 °C) 400V |
|---|---|---|
| Water temperature [°C] | 5 - 30 | 5 - 30 |
| Water pressure [bar] | 1 - 5 | 1 - 5 |
| Quality | Drinking water | Drinking water |
| pH value | 7.2 - 9.5 | 7.2 - 9.5 |
| Hardness | 6 - 14 °dH \| 100 - 250 mg $CaCO_3$/l | 6 - 14 °dH \| 100 - 250 mg $CaCO_3$/l |
| Water supply | 3/4" external thread | 3/4" external thread |
| Water drain | 14 mm hose connection | 14 mm hose connection |

### Condenser

| | ZBE 1.200 (R454C 20 °C) 400V | ZBE 1.200 (R454C 35 °C) 400V |
|---|---|---|
| Condenser | Air-cooled | Air-cooled |
| Heat carrier flowrate [$m^3/h$] | 2900 | 3000 |
| Heat emission [kW] | 9.6 | 11.3 |

### Compressor

| | ZBE 1.200 (R454C 20 °C) 400V | ZBE 1.200 (R454C 35 °C) 400V |
|---|---|---|
| Compressor | Fully hermetic | Fully hermetic |
| Cooling capacity [kW] | 5.6 | 6.1 |
| Evaporation temperature [°C] | -24 | -23 |
| Condensation temperature [°C] | 33 | 45 |

### Noise emissions

| | ZBE 1.200 (R454C 20 °C) 400V | ZBE 1.200 (R454C 35 °C) 400V |
|---|---|---|
| Sound power level [dBA] | 77.5 | 79.5 |
| Sound pressure level 3 m [dBA] | 60 | 62 |

Subject to technical changes. Please consult us in the event of any discrepancies.

## Contents of the package

The ZIEGRA ice machine is supplied CE-compliant and ready for use, requiring only connection to water and electricity.

Made In Germany

# Ice Machine ZBE 1.200 R454C

## ZIEGRA Quality and Safety

- Condensation control for consistent ice quality
- Phase sequence relay
- High/low pressure switch
- Overvoltage/undervoltage monitoring for 3-phase machines
- Overcurrent trip device / thermal protection for all motors and compressors
- Water level monitoring

## Accessories included

- Ice discharge hose or ice discharge chute as required
- Shutdown via reflective light sensor when the trolley or tank is full
- Connection cable with plug
- Water inlet and outlet hoses
- PE ice scoop
- A wide range of accessories available on request

Specification

Made In Germany


www.ziegra.com ❄ ice@ziegra.com ❄ Tel: +49 (0)511 90 244 0