Ice Machine ZBE 1.000 R454C

Specification



High-quality components in a robust stainless steel housing

Key features

- Capacity: 1000 kg/24 h crushed ice at 20 °C air temperature and 15 °C water temperature
- Capacity: 1000 kg/24 h crushed ice at 35 °C air temperature and 25 °C water temperature
- Designed for continuous operation: 24 hours a day, 7 days a week
- Hygienic design:
  Closed water system – protection against contamination from external influences
- Environmentally friendly technology:
  No rotating parts in the evaporator's refrigeration circuit – no refrigerant leaks



MacroIce (MA)

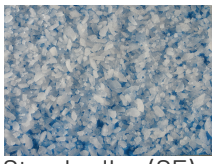

StandardIce (SE)

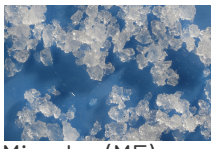

MicroIce (ME)

Dimensions and connections

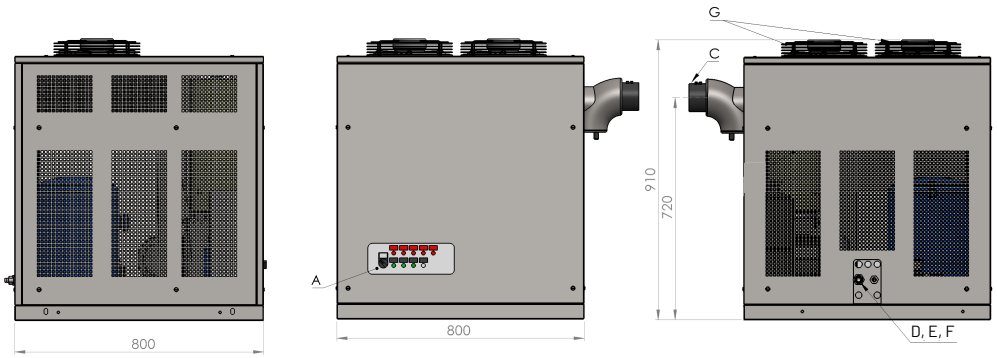

A Operating switch
C Ice discharge
D Electrical connection
E Water inlet
F Water outlet
G Condenser fan

To be provided by customer:
Water filter
Shut-off valve
Electrical fuse
Wastewater connection (contactless)

Technical specifications

General

	ZBE 1.000 (R454C 20 °C) 400V	ZBE 1.000 (R454C 35 °C) 400V
Nominal capacity [kg/24h]	1000	1000
Dimensions (L x W x H) [cm]	80 x 80 x 85	80 x 80 x 85
Weight [kg]	190	215
Housing	Stainless steel	Stainless steel
Ambient temperature [°C]	5 - 42	5 - 45
Minimum room volume [m^3]	51.2	58.0

Made in Germany

www.ziegra.com ❄ ice@ziegra.com ❄ Tel: +49 (0)511 90 244 0

Specification

Refrigerants

	ZBE 1.000 (R454C 20 °C) 400V	ZBE 1.000 (R454C 35 °C) 400V
Refrigerant	R454C	R454C
Refrigerant quantity [kg]	3	3.4

Electrical data

	ZBE 1.000 (R454C 20 °C) 400V	ZBE 1.000 (R454C 35 °C) 400V
Supply voltage	3/N/PE ~ 400V 50 Hz	3/N/PE ~ 400V 50 Hz
Full load current [A]	7.5	8.5
Power consumption [kW]	3	4.3
Fuse, slow-blow	25 A	32 A
IP protection class	IP 54	IP 54
Cable cross-section [mm^2], Cu	4	4

Water connection data

	ZBE 1.000 (R454C 20 °C) 400V	ZBE 1.000 (R454C 35 °C) 400V
Water temperature [°C]	5 - 30	5 - 30
Water pressure [bar]	1 - 5	1 - 5
Quality	Drinking water	Drinking water
pH value	7.2 - 9.5	7.2 - 9.5
Hardness	6 - 14 °dH | 100 - 250 mg $CaCO_3$/l	6 - 14 °dH | 100 - 250 mg $CaCO_3$/l
Water supply	3/4" external thread	3/4" external thread
Water drain	14 mm hose connection	14 mm hose connection

Condenser

	ZBE 1.000 (R454C 20 °C) 400V	ZBE 1.000 (R454C 35 °C) 400V
Condenser	Air-cooled	Air-cooled
Heat carrier flowrate [m^3/h]	2900	3000
Heat emission [kW]	7.3	9

Compressor

	ZBE 1.000 (R454C 20 °C) 400V	ZBE 1.000 (R454C 35 °C) 400V
Compressor	Fully hermetic	Fully hermetic
Cooling capacity [kW]	4.6	5.1
Evaporation temperature [°C]	-22	-21
Condensation temperature [°C]	33	45

Noise emissions

	ZBE 1.000 (R454C 20 °C) 400V	ZBE 1.000 (R454C 35 °C) 400V
Sound power level [dBA]	77.5	79.5
Sound pressure level 3 m [dBA]	60	62

Subject to technical changes. Please consult us in the event of any discrepancies.

Contents of the package

The ZIEGRA ice machine is supplied CE-compliant and ready for use, requiring only connection to water and electricity.

Made In Germany

Ice Machine ZBE 1.000 R454C

ZIEGRA Quality and Safety

- Condensation control for consistent ice quality
- Phase sequence relay
- High/low pressure switch
- Overvoltage/undervoltage monitoring for 3-phase machines
- Overcurrent trip device / thermal protection for all motors and compressors
- Water level monitoring

Accessories included

- Ice discharge hose or ice discharge chute as required
- Shutdown via reflective light sensor when the trolley or tank is full
- Connection cable with plug
- Water inlet and outlet hoses
- PE ice scoop
- A wide range of accessories available on request

Specification

Made In Germany

www.ziegra.com ❄ ice@ziegra.com ❄ Tel: +49 (0)511 90 244 0